Art. 9664 W15

Profilo Solar per tassello scorrevole M 8, montaggio laterale, sezione mm. 40x40, Alluminio

Solar mounting rail for slot nut M 8, lateral mounting, section mm. 40x40, Aluminum

Codice Articolo *Item Number*	**L Profilo (mm)** *L mounting rail (mm)*	**Box**	**Pallet**
9664-W15	6400	5	100
9664-W15MT320	3200	5	100

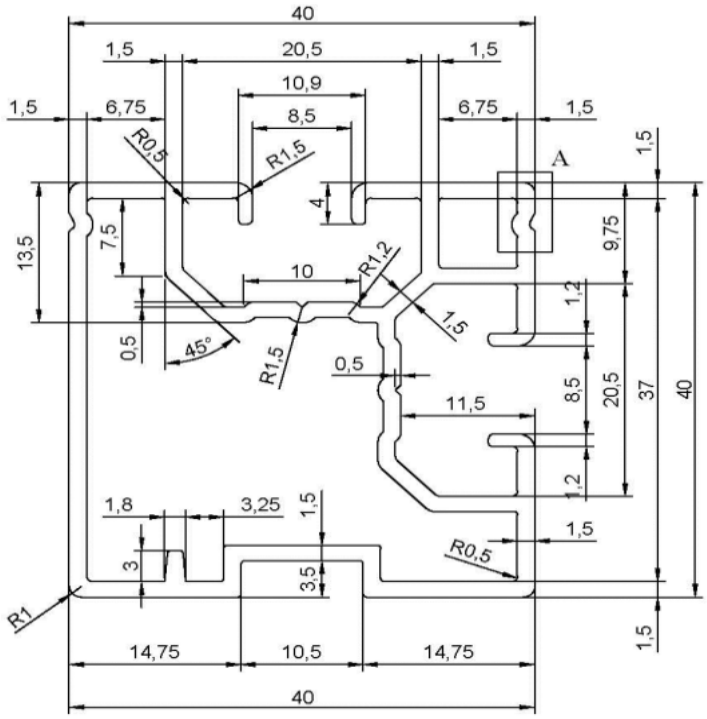

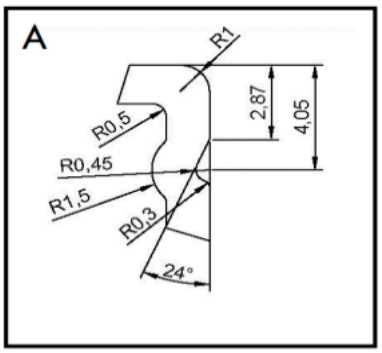

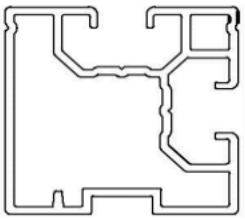

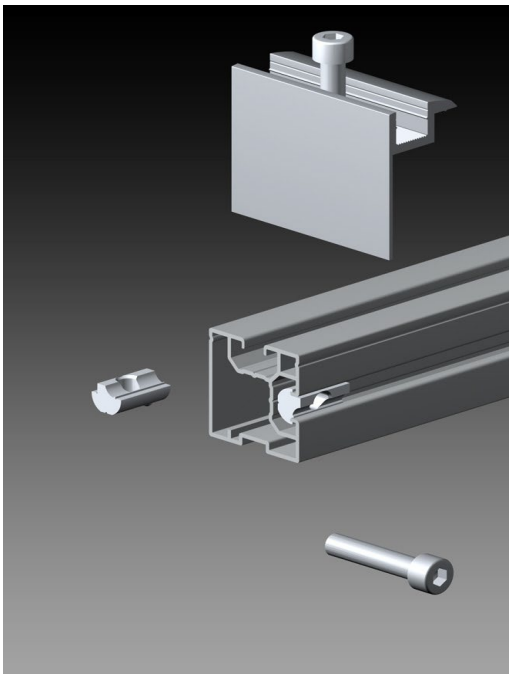

m'	0.804 kg/m
Ixx	56955 mm^4
Ixy	582 mm^4
Iyy	56137 mm^4
Iyx	582 mm^4
Ix	57258 mm^4
Iy	55834 mm^4
φ	27.5 Grad
Wp	113093 mm^4
A	297.6 mm^2
Sx/Sy	21.5 mm / 21.2 mm

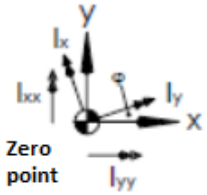

Coordinates of the centre of gravity Sx/Sy referred to zero point

last edit 27/04/2022
DRAWING N. 1177